Vectronic VRLA Battery

(General purpose)
VDJW12-7.0 (12V7Ah)

VRLA Battery

Specifications

Rated Voltage		12V
Nominal Capacity(C_{20},1.75V/cell)		7.0Ah
Dimension	Length	151±2mm (5.94 inches)
	Width	65±1mm (2.56 inches)
	Container Height	93.5±1mm (3.68 inches)
	Total Height	99.5±1mm (3.92 inches)
Approx Weight		1.97 Kg (4.34 lbs)
Terminal		T1/T2
Container Material		ABS
Rated Capacity(25℃)	7.00 Ah	(20hr,0.350A,1.75V/cell)
	6.53 Ah	(10hr,0.653A,1.75V/cell)
	5.85 Ah	(5hr,1.19A,1.75V/cell)
	5.30 Ah	(3hr,1.77A,1.75V/cell)
	4.27 Ah	(1hr,4.27A,1.60V/cell)
5S Max. Discharge Current		105A (5s)
Internal Resistance(25℃)		Approx 33mΩ
Operating Temp. Range	Discharge	-20 ~ 55℃ (-4 ~ 131℉)
	Charge	-20 ~ 40℃ (-4 ~ 104℉)
	Storage	-15 ~ 50℃ (5 ~ 122℉)
Nominal Operating Temp. Range		25±3℃ (77±5℉)
Max.Charging Current(25℃)		2.10A
Charge voltage(25℃)		Charge voltage / Temp. Coefficient
	Float	2.25~2.30V/cell, -3mV/℃
	Equalization	2.35~2.45V/cell, -4mV/℃
	Cycle	2.35~2.45V/cell, -5mV/℃
Effect of temp. to Capacity	40℃ (104℉)	103%
	25℃ (77℉)	100%
	0℃ (32℉)	86%
Self Discharge		≤3% @ 25℃



Layout

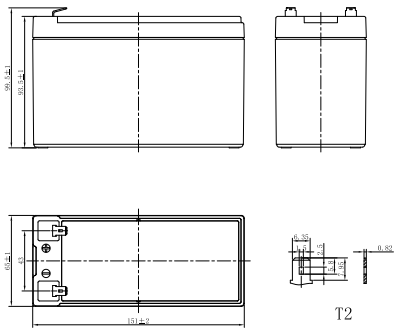

(A)25℃ Constant Current Discharge

F.V/Time	5min	10min	15min	20min	30min	45min	1h	1.5h	2h	3h	4h	5h	6h	8h	10h	20h
1.85V/cell	17.0	12.5	9.90	8.10	6.12	4.64	3.91	2.90	2.38	1.72	1.36	1.16	0.99	0.780	0.637	0.343
1.80V/cell	18.5	13.2	10.3	8.35	6.28	4.73	3.99	2.95	2.41	1.74	1.38	1.18	1.01	0.790	0.644	0.347
1.75V/cell	19.9	13.8	10.7	8.60	6.43	4.83	4.06	3.00	2.45	1.77	1.40	1.19	1.02	0.800	0.653	0.350
1.70V/cell	21.4	14.4	11.1	8.86	6.57	4.92	4.13	3.05	2.49	1.79	1.42	1.21	1.03	0.809	0.660	0.354
1.67V/cell	22.3	14.8	11.3	9.01	6.67	4.98	4.17	3.08	2.51	1.81	1.43	1.22	1.04	0.816	0.665	0.356
1.60V/cell	24.3	15.7	11.8	9.40	6.87	5.11	4.27	3.14	2.56	1.84	1.46	1.24	1.06	0.829	0.675	0.361

(W/cell) 25℃ Constant Power Discharge

F.V/Time	5min	10min	15min	20min	30min	45min	1h	1.5h	2h	3h	4h	5h	6h	8h	10h	20h
1.85V/cell	32.3	23.9	19.1	15.6	11.8	9.01	7.61	5.67	4.65	3.37	2.69	2.29	1.96	1.55	1.27	0.686
1.80V/cell	34.8	25.0	19.7	16.0	12.1	9.15	7.73	5.74	4.71	3.42	2.72	2.32	1.99	1.57	1.28	0.693
1.75V/cell	37.4	26.1	20.3	16.4	12.3	9.30	7.84	5.82	4.77	3.46	2.76	2.35	2.01	1.58	1.29	0.700
1.70V/cell	39.9	27.2	20.9	16.8	12.5	9.40	7.95	5.90	4.84	3.50	2.79	2.37	2.03	1.60	1.31	0.707
1.67V/cell	41.4	27.8	21.3	17.1	12.7	9.50	8.02	5.95	4.87	3.53	2.81	2.39	2.05	1.61	1.32	0.712
1.60V/cell	44.7	29.2	22.1	17.6	13.0	9.70	8.17	6.05	4.95	3.59	2.85	2.43	2.08	1.64	1.34	0.722

Vectronic VRLA Battery

(General purpose)
VDJW12-7.0 (12V7Ah)

VRLA Battery

Applications

- Telecommunications
- UPS, Data Center
- Energy Storage, Electric Systems
- Emergency Lighting, Security
- Medical, Electronic Equipment

General Features

- Under 25℃, the designed floating life is up to 5 years.
- Special exhaust structure and sealing technology, safe and reliable, flexible installation, convenient maintenance.

Standards

- Compliance with IEC 61056,GB/T19639

Discharge Characteristics

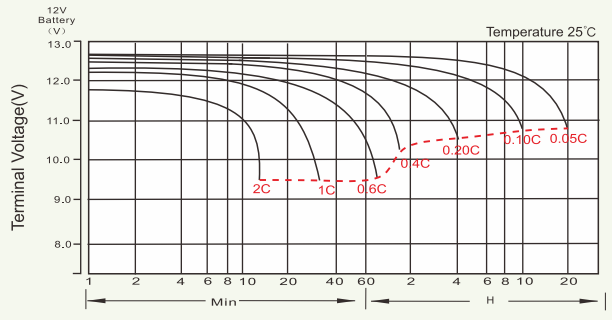

Float Charging Characteristics

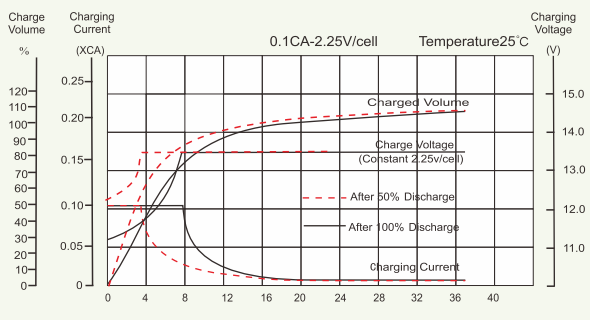

Temperature Effects in Relation to Battery Capacity

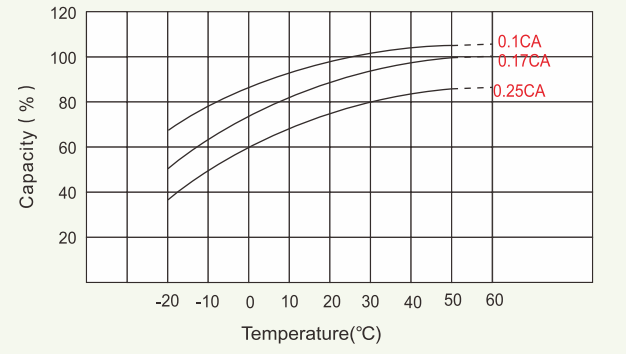

Temperature Effects on Long Term Float Life

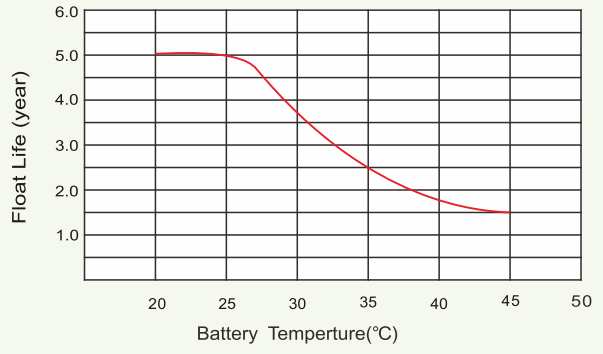

LB-VDJW12-7.0-PD-220762-V1.0-202410

Vectronic

Due to product improvement, above specifications are subject to change without prior notice.

© 2025