Vectronic VRLA Battery

(General purpose)
VDJW12-65 (12V65Ah)

VRLA Battery

Specifications

Rated Voltage		12V
Nominal Capacity(C_{20},1.75V/cell)		65Ah
Dimension	Length	348±2mm (13.7 inches)
	Width	167±2mm (6.58 inches)
	Container Height	178±2mm (7.00 inches)
	Total Height	178±2mm (7.00 inches)
Approx Weight		18.0kg (39.7 lbs)
Terminal		M6
Container Material		ABS
Rated Capacity(25℃)	65.0 Ah	C20(3.25A,1.75V/cell)
	59.8 Ah	C10(5.98A,1.75V/cell)
	53.0 Ah	C5(10.6A,1.75V/cell)
	47.7 Ah	C3(15.9A,1.75V/cell)
	39.9 Ah	C1(39.9A,1.60V/cell)
5S Max. Discharge Current		650A (5s)
Internal Resistance(25℃)		Approx 7.4mΩ
Operating Temp. Range	Discharge	-20 ~ 55℃ (-4 ~ 131℉)
	Charge	-20 ~ 40℃ (-4 ~ 104℉)
	Storage	-15 ~ 50℃ (5 ~ 122℉)
Nominal Operating Temp. Range		25±5℃ (77±5℉)
Max.Charging Current(25℃)		19.5A
Charge voltage(25℃)		Charge voltage / Temp. Coefficient
	Float	2.23~2.27V/cell, -3mV/℃
	Equalization	2.35~2.40V/cell, -4mV/℃
	Cycle	2.40~2.50V/cell, -5mV/℃
Effect of temp. to Capacity	40℃ (104℉)	106%
	25℃ (77℉)	100%
	0℃ (32℉)	86%
Self Discharge		≤3% @ 25℃

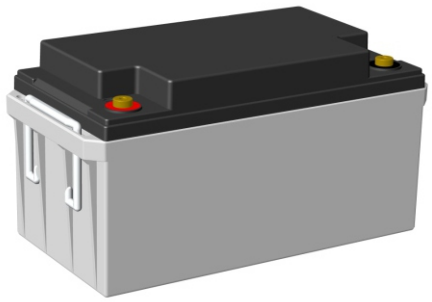

Layout

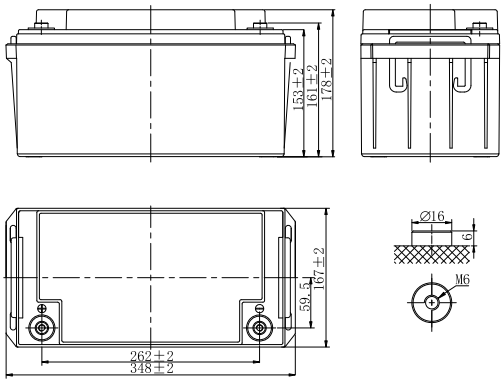

(A)25℃ Constant Current Discharge

F.V/Time	5min	10min	15min	20min	30min	45min	1h	1.5h	2h	3h	4h	5h	6h	8h	10h	20h
1.85V/cell	117.2	87.7	72.8	61.6	47.7	36.3	31.3	23.7	19.0	14.3	11.5	9.60	8.37	6.62	5.52	3.04
1.80V/cell	136.7	103.4	84.7	71.0	53.9	40.6	34.6	25.9	20.7	15.5	12.4	10.4	8.98	7.09	5.89	3.21
1.75V/cell	149.1	110.8	89.6	74.5	56.3	42.2	35.9	26.8	21.4	15.9	12.7	10.6	9.17	7.22	5.98	3.25
1.70V/cell	161.5	118.2	94.7	78.4	58.8	43.8	37.2	27.7	22.0	16.4	13.0	10.8	9.36	7.34	6.07	3.29
1.67V/cell	168.6	122.5	97.6	80.6	60.3	44.8	38.0	28.2	22.4	16.6	13.2	11.0	9.47	7.42	6.13	3.32
1.60V/cell	185.9	132.6	104.7	85.8	63.7	47.1	39.9	29.4	23.3	17.2	13.6	11.3	9.74	7.60	6.26	3.37

(W/cell) 25℃ Constant Power Discharge

F.V/Time	5min	10min	15min	20min	30min	45min	1h	1.5h	2h	3h	4h	5h	6h	8h	10h	20h
1.85V/cell	222.8	167.8	139.9	118.7	92.1	70.4	60.9	46.2	37.2	28.1	22.5	18.9	16.5	13.1	10.9	6.05
1.80V/cell	255.8	195.5	161.0	135.4	103.3	78.1	66.9	50.2	40.3	30.3	24.2	20.3	17.7	14.0	11.6	6.38
1.75V/cell	274.8	207.1	168.5	140.7	107.0	80.6	68.9	51.6	41.3	31.0	24.7	20.7	18.0	14.2	11.8	6.45
1.70V/cell	292.8	218.0	176.1	146.6	110.7	83.1	70.9	53.0	42.4	31.7	25.3	21.1	18.3	14.4	12.0	6.53
1.67V/cell	302.8	224.2	182.1	149.8	112.9	84.5	72.0	53.8	43.0	32.1	25.6	21.4	18.5	14.6	12.1	6.57
1.60V/cell	325.3	237.6	190.0	157.0	117.8	87.9	74.8	55.7	44.4	33.1	26.3	21.9	18.9	14.9	12.3	6.68

Vectronic VRLA Battery

(General purpose)
VDJW12-65 (12V65Ah)

VRLA Battery

Applications

- Telecommunications
- UPS, Data Center
- Energy Storage, Electric Systems
- Emergency Lighting, Security
- Medical, Electronic Equipment
- Motive Power

General Features

- Under 25°C, the designed floating life is up to 12 years.
- Self-discharge rate is extremely low
- Wide range of operating temperature
- Good sealing performance
- Good conductivity
- Excellent charge acceptance
- Safe and reliable explosion-proof exhaust system

Standards

- Compliance with IEC 60896 and YD/T 799 standards
- UL Certified
- Manufactured in Leoch®IATF16949, ISO 45001,ISO 9001 and ISO 14001 certified production facilities

Discharge Characteristics

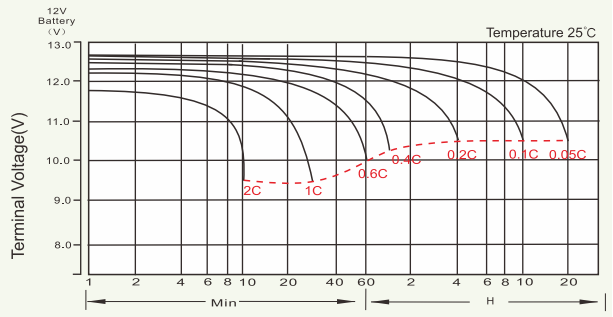

Discharge Time

Float Charging Characteristics

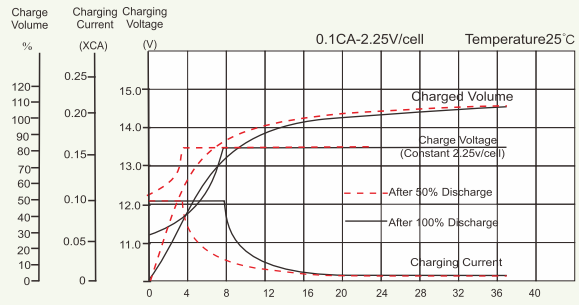

Charging Time(hours)

Temperature Effects in Relation to Battery Capacity

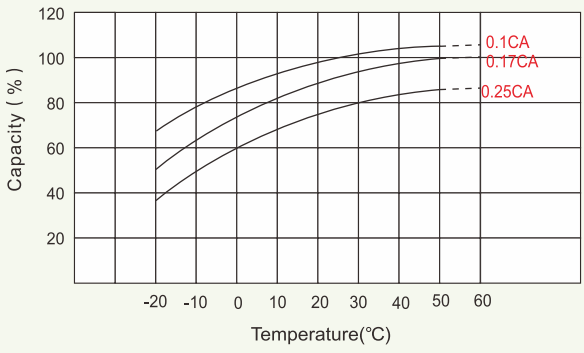

Temperature Effects on Long Term Float Life

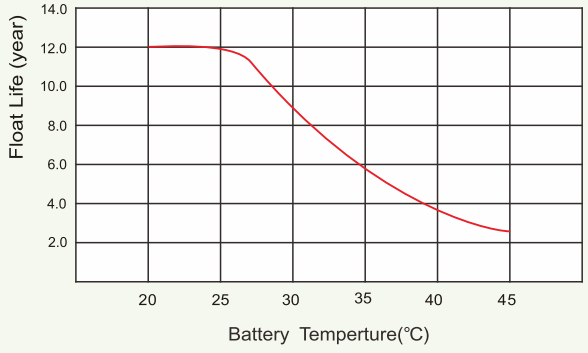

Vectronic

Due to product improvement, above specifications are subject to change without prior notice.

© 2025